Application handbook

Measuring and monitoring relays

Preface

This manual contains application examples for the ABB Stotz-Kontakt CM range measuring and monitoring relays.
The entire product range includes further devices that are described in our product catalogue.

With this manual we like to introduce you to the different possible fields of application for our monitoring devices, regardless of whether you have already used them by your own or you are an interested beginner without any special application knowledge.

This manual supplements our product catalogue and provides the general functionality as well as application suggestions for our measuring and monitoring relays. For additional technical data please refer to our catalogue or contact us.

You can either read the entire manual or selectively gather information about individual devices and their possible applications.
The table of contents and the index section enable quick and easy access to the desired information. If you have any questions regarding specific devices, please refer to the „Frequently asked questions“ section in the respective chapter.

The applications shown in this manual are examples. Each use of measuring and monitoring relays in practice has to be planned according to the specific installation in order to guarantee permanent availability and safety of your devices and installations by a specifically designed monitoring functionality.

ABB STOTZ-KONTAKT GmbH
February 2004

Alina Fraczyk

Matthias Eschle

Contents

Measuring in and monitoring of electric networks

It is not possible to completely avoid the occurrence of faults when operating electric installations. This is why suitable protection devices have to be used in order to limit the consequences of faults to tolerable dimensions.

In worst case, the possible faults can affect the availability of the installation. Occurring failures of particular parts of the installation often prevent permanent availability of functionality or power supply, resulting in additional costs due to operating failures.
On equipment level, the effects of occurring faults entrain an increased risk of expensive repairs or non-reversible damages.

Consequently, each installation has a considerable demand for reliable and quick-acting measuring and monitoring devices for permanent monitoring of all electrical and physical operating quantities. In case of a fault, these devices enable quick and specific reactions, such as a direct switch-off for the respective part of installation, the output of a message to the controller or signaling the failure for manual processing. This way, dangerous situations are detected as they are coming up and faults can be measured and treated with corresponding short response times.

Since possible faults can concern different network parameters, monitoring devices with an exactly and specifically designed monitoring functionality are required, ranging from voltage monitoring up to insulation and level monitoring.

The ABB Stotz-Kontakt measuring and monitoring relays are ready to accept this challenge: They are able to optimally meet their assigned measuring and monitoring tasks and become individual safety-relevant devices if used specifically designed for the specific service conditions.

In order to guarantee reliable operation of an installation, the measuring and monitoring devices have to respond to occurring failures quickly, reliably and selectively. Occurring failures have to be forwarded to the control unit immediately, which, for instance, then initiates a selective switch-off for the respective part of installation.

When engineering the protection devices for electric installations, economic viability is a decisive factor. Therefore, the importance of individual devices for the installation, their expected lifetime and the upcoming costs in case of failures (e.g. repair costs, loss of production) should be carefully weighed. The conception of protection devices for these parts of installation should be based on these considerations. If the protected devices are of particular importance for the availability of service, redundant fault protection can be advisable. If fault occurrence is infrequent but resulting in high repair costs for the concerned equipment, a corresponding protection device should be integrated as a precaution.

The suitable relay is selected from the CM product range and integrated into the installation depending on the required monitoring functionality and protection principle (e.g. open- or closed-circuit principle) and guarantees reliable and safe operation of the installation.

In this manual, some measuring and monitoring relays from the ABB Stotz-Kontakt product range are introduced, sorted according to their monitoring function.
The relay functions are explained following an introducing description of the monitoring task. After this, some application examples for the devices are shown and frequently asked questions about how to deal with the devices are treated.

General questions regarding ABB measuring and monitoring relays

Q:
What is a hysteresis?
A:
The term hysteresis denotes a delayed occurrence of an effect after its reason. In context with measuring and monitoring relays the term hysteresis refers to the delayed release of an energized relay after its threshold value has been reached again.
Example: A voltage monitor picks up if the voltage rises above 250 V, i.e. overvoltage detected, output relay is energized (open-circuit principle), but it does not de-energize immediately if the voltage decreases to the threshold value of 250 V again but only after the hysteresis value has been reached.
The hysteresis is given in per cent of the threshold value. The release hysteresis prevents the relay from continuously switching on and off in case of voltage variations around the threshold value.

Q:
What do the terms open-circuit principle and closed-circuit principle mean?
A:
The terms open-circuit principle and closed-circuit principle describe the function of the relay output contacts. If a device is working according to the open-circuit principle, the output relays energize if the measured value exceeds or falls below the adjusted threshold value.
If a device is working according to the closed-circuit principle, the output relay is energized in the initial state and de-energizes if the adjusted threshold value is reached.

Q:
What are the adjustment tolerances of the CM range measuring and monitoring relays?
A:
The tolerances of all devices are ± 10% (marking tolerance, mechanical and electrical tolerances).

Space for your notes

Current monitoring

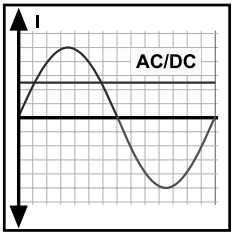

In an electric network currents are only allowed within a definite tolerance range. In many cases, safe and reliable operation of the devices and installations can no longer be guaranteed if the current exceeds or falls below these tolerances. This is why the current in the network has to be monitored permanently in order to be able to initiate corresponding protective measures immediately in case of a fault.

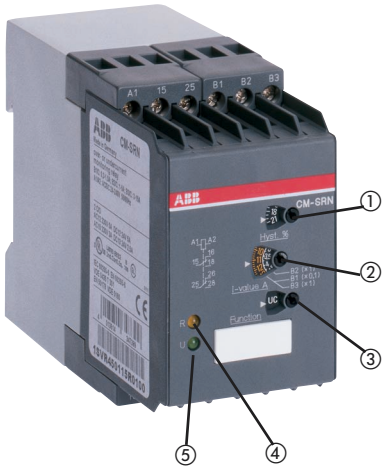

1SVR 450 115 F 0100

CM-SRN

① Hysteresis adjustment
② Threshold value adjustment
③ Selector for overcurrent (OC) or undercurrent monitoring (UC)
④ Yellow LED - relay status
⑤ Green LED - supply voltage

Single-phase current monitor CM-SRN

This type of current monitor allows the manual selection of the desired protection function: It is able to detect undercurrents and, depending on the model, overcurrents. For some versions a response delay time can be adjusted by the user in addition to the threshold value and the hysteresis. If adjusted, the device does not indicate any overcurrent or undercurrent before the response delay time has expired. The output relay de-energizes again, if the threshold value plus/minus the hysteresis are exceeded/underrun again.

Application ‘railroad overhead contact system’

Drive motor protection during voltage switching

Power supply in railroad overhead contact systems is performed by feeding the current into the overhead contact lines via line entries. The current is then available for trains and other consumers connected to the power system, e.g. for infrastructural facilities on railroad stations. The rails are used for the return line.

Switching from one overhead contact line to another is performed by means of switching devices, e.g. circuit breakers and isolating switches. These devices are driven by DC motors.

In order to guarantee the availability of the switching device and thus a reliable voltage switching, permanent protection of the drive motors is required. Overcurrents can damage the motors and therefore have to be detected immediately on their occurrence in order to be able to switch-off the connected motor prior to possible destructions.
This is why current monitors of the type CM-SRN are integrated in the control cabinets located at the overhead contact line entries. For example, on the occurrence of an overcurrent resulting from a short circuit, the CM-SRN forwards the overcurrent information to the PLC which switches off the endangered motor.
This way the availability of switching devices for the overhead contact system is guaranteed.

Control cabinet with CM-SRN

Current monitoring: Frequently asked questions

Q:
I want to measure currents higher than the specified measuring range of the CM-SRN. What do I have to do?
A:
For measuring range extension you have to connect a current transformer (for AC load only) or a shunt resistor (for AC or DC load) in parallel to the CM-SRN.

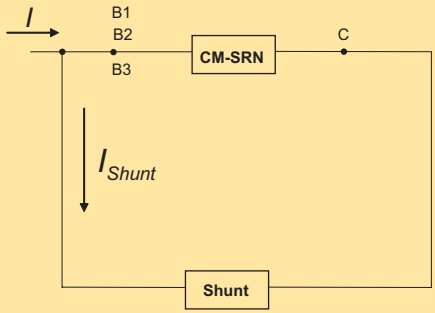

$$I = I_{CM\text{-}SRN} + I_{Shunt}$$

The dimension of the shunt has to be chosen accordingly that the current flowing through the CM-SRN is within the measuring range of the current monitoring relay.

Example:
Current to be monitored: 110 A
Selected range of the CM-SRN: 1 - 5 A

Range multiplier „n“: $n = \frac{110}{3} \approx 3$

3 has been selected since it is the mean value of the measuring range

$$\text{Shunt resistance „}R_S\text{“} = \frac{\text{Input resistance „}R_i\text{“}}{\text{Range multiplier „n“ - 1}}$$

$$R_S = \frac{R_i}{n - 1} = \frac{18\ m\Omega}{37 - 1} \approx 0.58\ m\Omega$$

18 mΩ is the input resistance of the CM-SRN. Please refer to the technical data in our catalogue for this value.

Selected R_S: 1.3 mΩ (next standard value)

Current monitoring: Frequently asked questions

Q:
Is it possible to supply the current monitors directly from the measuring voltage?
A:
Yes.

Q:
Has the measuring circuit to be protected by a fuse?
A:
Device protection is not necessary. Sufficient line protection, however, is necessary.

Q:
What is the maximum permitted voltage for the measuring inputs?
A:
The maximum permitted voltage that can be applied to the measuring inputs of the CM-SRN is 400 V.

Q:
What is the maximum current-carrying capacity of the CM-SRN measuring inputs?
A:

Measuring circuit	B1-C	B2-C	B3-C	B1-C	B2-C	B3-C
Pulse overload t < 1 s	300 mA	1 A	10 A	15 A	50 A	100 A
Permanent overload	50 mA	150 mA	1.5 A	2 A	7 A	20 A

Voltage monitoring

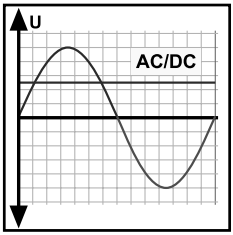

Voltage monitoring in electric installations is important for the following reasons:
In case of overvoltages the consumers heat up. If the temperatures reach inadmissible values the devices can fail or become destroyed.
In case of undervoltages the devices are possibly operating in an undefined range where some parts of the installation are still working properly whereas other parts are no longer working. This can also lead to damage of the installation or the product.

The voltage monitoring devices shown below are able to reliably eliminate dangerous situations resulting from voltage variations and thus ensure the availability of installations.

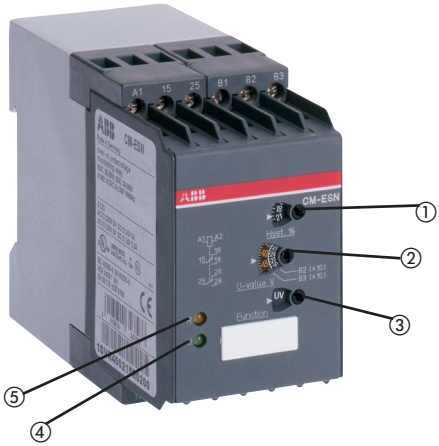

1SVR 450 215 F 0200

Single-phase voltage monitor CM-ESN

The voltage monitor CM-ESN monitors the applied single-phase voltage. Measuring range selection is performed via the terminals B1, B2 or B3 and C.
Depending on the selected mode of operation the output relay is energized if the monitored voltage exceeds or falls below a threshold. It de-energizes again, if the voltage again falls below or exceeds the threshold value plus/minus the manually adjusted hysteresis.

CM-ESN

① Hysteresis adjustment
② Threshold value adjustment
③ Function selection (UV/OV)
④ Green LED - supply voltage
⑤ Yellow LED - relay status

Voltage monitoring

1SVR 430 831 F 1200

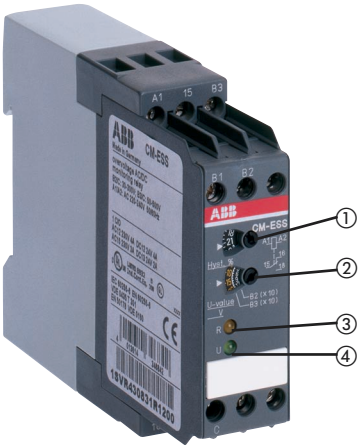

CM-ESS

① Hysteresis adjustment
② Threshold value adjustment
③ Yellow LED - relay status
④ Green LED - supply voltage

Single-phase voltage monitor CM-ESS

The voltage being monitored is applied to the terminals B1, B2 or B3 and C, depending on the measuring range.
The voltage threshold is adjusted on the device. The output relay is energized if this voltage threshold is exceeded. It de-energizes again, if the voltage again falls below the threshold value minus the manually adjusted hysteresis.
The switching status of the relay as well as the presence of the supply voltage is indicated on the device by LEDs.

Application
‘overvoltage protection in low-voltage systems’

Ultimate consumer protection using the voltage monitor CM-ESS

The 6.35 kV medium-high voltage is fed to a transformer via open lines and converted to 230 V low voltage for distribution to the ultimate consumer’s domestic installation. On the 230 V low-voltage side, no overvoltages are allowed since this would damage the connected devices. This is why voltage monitoring is required here.

The CM-ESS voltage monitor is able to detect overvoltages, for instance caused by an interruption of the neutral. In this case the output relay energizes a contactor coil; the main contactor is opened and the supply of the ultimate consumer’s devices is interrupted.

The measuring and switching characteristics of the CM-ESS determine different switching times depending on the overvoltage level: High overvoltage levels of e.g. 400 V result in faster disconnection of the supply voltage than overvoltages of e.g. 270 V.

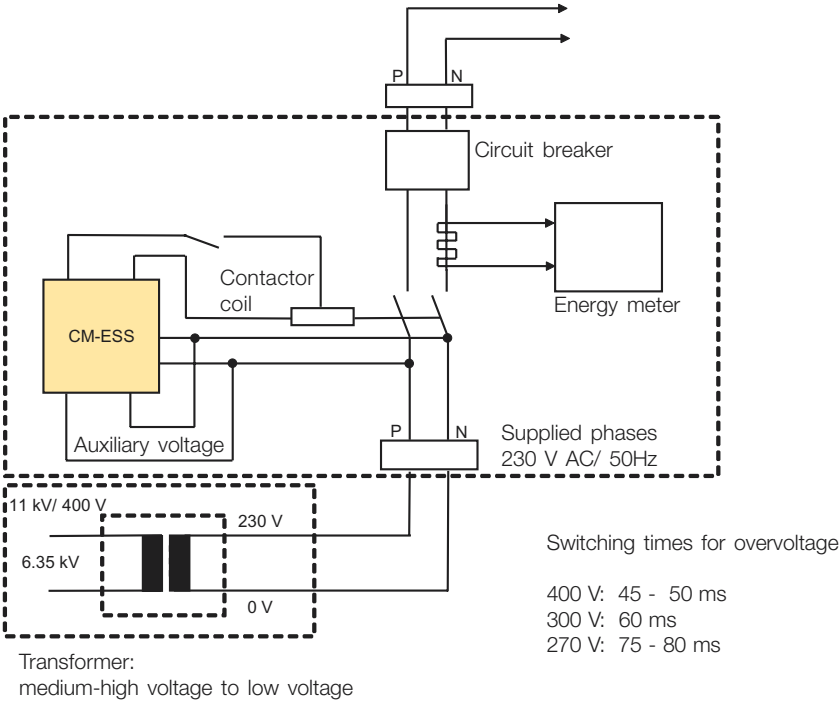

Circuit diagram for a single-phase overvoltage relay with circuit breaker and energy meter

Voltage monitoring: Frequently asked questions

Q:
I want to monitor a voltage higher than the measuring range of the CM-ESN/CM-ESS. What do I have to do?
A:
Extension of the CM-ESN/CM-ESS measuring range can be achieved by connecting a specifically dimensioned resistor in series.
Since the operating voltage is then divided to the series resistor and the voltage monitor CM-ESN/CM-ESS, the monitored partial voltage can be adjusted to the measuring range of the CM-ESN/CM-ESS this way.

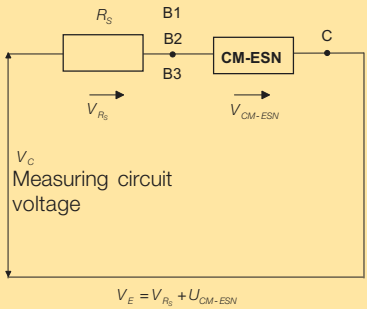

Example for dimensioning the series resistor:

Voltage to be monitored (measuring voltage): V_C = 600 V

Measuring range of the CM-ESN: $V_{B2...C}$ = 50-500 V

Input resistance of the CM-ESN: 951 kΩ
The input resistance can be found in our catalogue in the technical data of the CM-ESN.

$$R_S = R_i \times \frac{V_C - V_{CM\text{-}ESN}}{V_{CM\text{-}ESN}} = 951\ k\Omega \times \frac{600\ V - 500\ V}{500\ V} = 190.2\ k\Omega$$

R_S = 190.2 kΩ

Thus the required series resistance is 190.2 kΩ.

Voltage monitoring: Frequently asked questions

Q:
What is the voltage monitor's current consumption from the measuring circuit?
A:
This quantity calculates according to Ohm's law from the input resistance of the measuring input and the applied voltage.
The input resistance can be found in our catalogue in the technical data of the respective device.

Q:
Is it possible to supply the voltage monitoring devices directly from the measuring voltage?
A:
Yes.

Q:
Has the measuring circuit to be protected by a fuse?
A:
No, device protection is not necessary. Sufficient line protection, however, is necessary.

Q:
What is the maximum voltage-carrying capacity of the measuring inputs?
A:

CM-ESS

Measuring circuit	B1-C	B2-C	B3-C
Pulse overload t < 1 s	25 V	80 V	100 V
Permanent overload	10 V	60 V	80 V

CM-ESN

Measuring circuit	B1-C	B2-C	B3-C	B1-C	B2-C	B3-C
Pulse overload t < 1 s	120 V	200 V	400 V	-	550 V	550 V
Permanent overload	100 V	150 V	300 V	-	500 V	550 V

Three-phase monitoring

On principle, all phase parameters such as phase loss, phase sequence and phase unbalance should be monitored in all three-phase networks.
If one phase completely fails within a three-phase network, e.g. due to a blown fuse, a connected motor will draw the required current from the remaining two phases. In this case the unbalancing can cause damages to the motor.

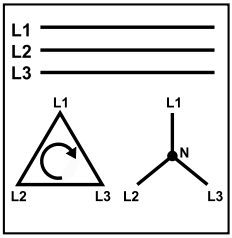

Changing the phase sequence means a change of the rotational direction of the connected device, e.g a generator, pump or fan. In this case the installation is no longer working properly.
If the supply by the three-phase system is unbalanced due to uneven distribution of the load, the motor will convert a part of the energy into reactive power. This energy gets lost unexploited and thus causes avoidable expenses.

Three-phase monitoring devices are used to avoid these problems.

1SVR 430 824 F 9300

CM-PFS

Three-phase monitor CM-PFS

The three-phase monitoring relay CM-PFS is able to detect an incorrect phase sequence in three-phase networks. As long as the phase sequence is correct, the relay remains energized and the yellow LED is on. The relay is de-energized if it detects a fault. In case of motors which continue running with only two phases, the CM-PFS detects phase sequence faults if the reverse fed voltage is not higher than 60 % of the original voltage. The two change-over contacts of the CM-PFS signalize the fault to a processing unit, e.g. a PLC.

① Yellow LED - relay status

Three-phase monitoring

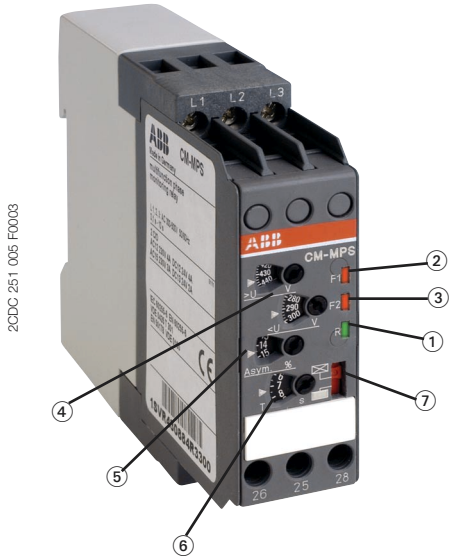

CM-MPS

① R: green LED - supply voltage for relay
② F1: red LED - fault signal
③ F2: red LED - fault signal
- Overvoltage: F1
- Undervoltage: F2
- Unbalance: F1 and F2 on
- Phase loss: F1 on, F2 flashes
- Phase sequence: F1 and F2 flash alternately

④ Threshold adjustment V_{min}/V_{max}
⑤ Unbalance threshold 2-15 %
⑥ Time adjustment 0.05-10 s
Phase sequence and phase loss are signaled without delay.
⑦ Slide switch for time delay selection
ON-delay
OFF-delay

Multifunctional three-phase monitor CM-MPS

This multifunctional device is able to monitor all phase parameters, such as over- and undervoltage, phase sequence, phase loss and phase unbalance. The thresholds for over- and undervoltage and phase unbalance can be adjusted as well as a trip time delay which allows short-term suppression of fault signals.
The two output relays are de-energized as soon as one of the faults occurs and (if applicable) the adjusted trip time delay has expired. They automatically re-energize again if all phase parameters are back within the adjusted limits.

Application
‘thyristor-controlled welding machine’

Phase loss monitoring for thyristor protection

In case of electric welding two metal workpieces are joined by fusion caused by an arc.

The direct contact between the welding electrode and the welded joint on the workpiece produces a short circuit which causes both electric contact points to fuse. If the electrode is now slightly removed from the workpiece, a very bright arc is produced, the energy of which enables the fusion of the metal materials, i.e. of the workpieces to be welded and the welding electrode.

To enable exact adjustment of the welding current according to the welding task, modern welding machines are equipped with thyristors. Thyristors are electronic components and used to control the welding voltage which directly determines the welding characteristics.

Front view of a welding machine

Since the thyristors of welding machines can become damaged by voltage unbalancing it is important to permanently protect them against phase loss.

Application
‘thyristor-controlled welding machine’

For the purpose of thyristor protection, phase loss relays of the type CM-PFS are integrated in the welding machines. In case of a loss of one phase the output contact of the phase loss relay drives a thermal circuit breaker connected in series which stops the machine. The phase loss is indicated by a signaling lamp which is driven by the second change-over output contact of the CM-PFS.

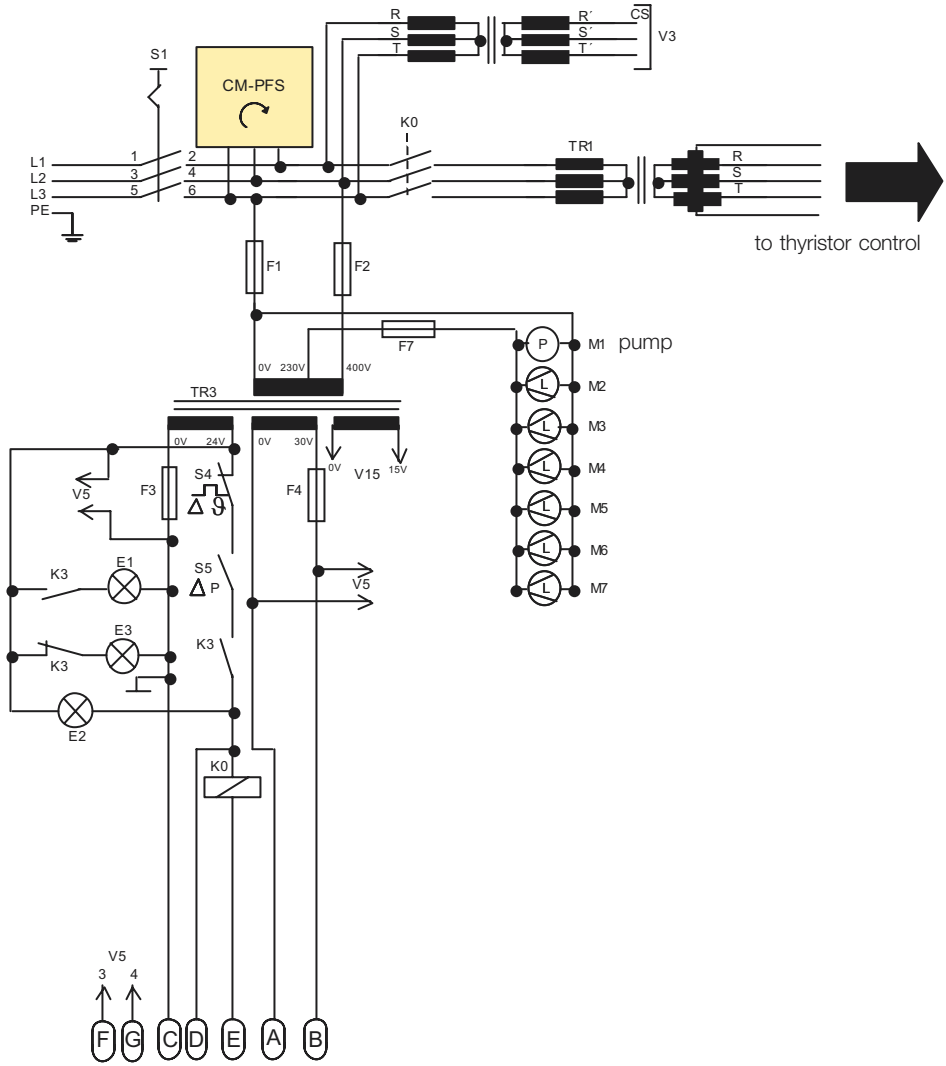

Cut-out of a circuit diagram for a thyristor-controlled welding machine

Application ‘refrigerating machines’

Ensuring the pump availability within refrigerating machines by means of phase sequence monitoring

Refrigerating machines are used to establish the right temperature between -120 and +400°C. Temperature control is performed by thermostats. Such machines are equipped with pumps to circulate the coolant within the bath vessel or to transport the coolant through the coolant circulation.
These pumps are central components regarding the availability of the refrigerating machine. Since the coolant systems of refrigerating machines are built without seals, repair work on the pumps is difficult in case of failure. The pump’s shaft would shear off due to mechanical reasons. To avoid high expenses for repair and the loss of availability resulting from pump failures as much as possible, it makes sense to monitor the phase sequence. This is why the refrigerating machines are equipped with phase sequence relays. The CM-PFS immediately signalizes the occurrence of an incorrect phase sequence to a PLC which initiates the driving motor to be switched off. The pump is protected against destruction and the long-term availability of the refrigerating machine is ensured.

Refrigerating machine

Application ‘refrigerating machines’

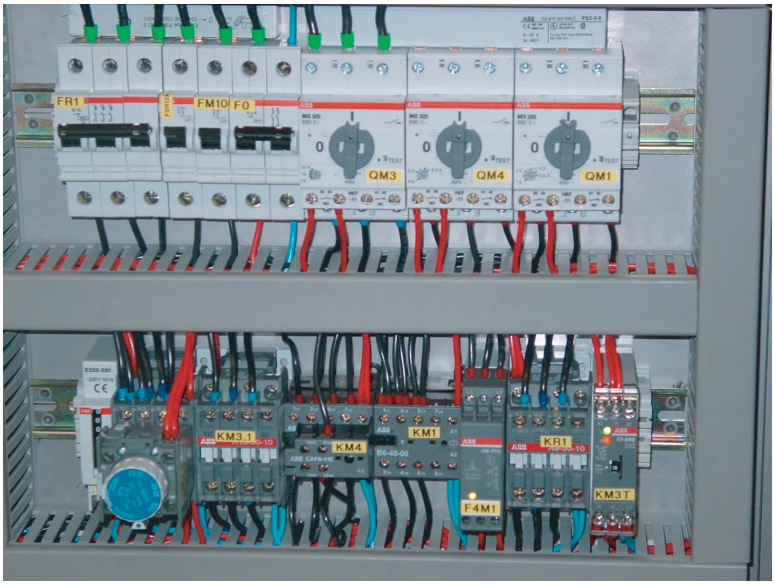

Control cabinet of a refrigerating machine

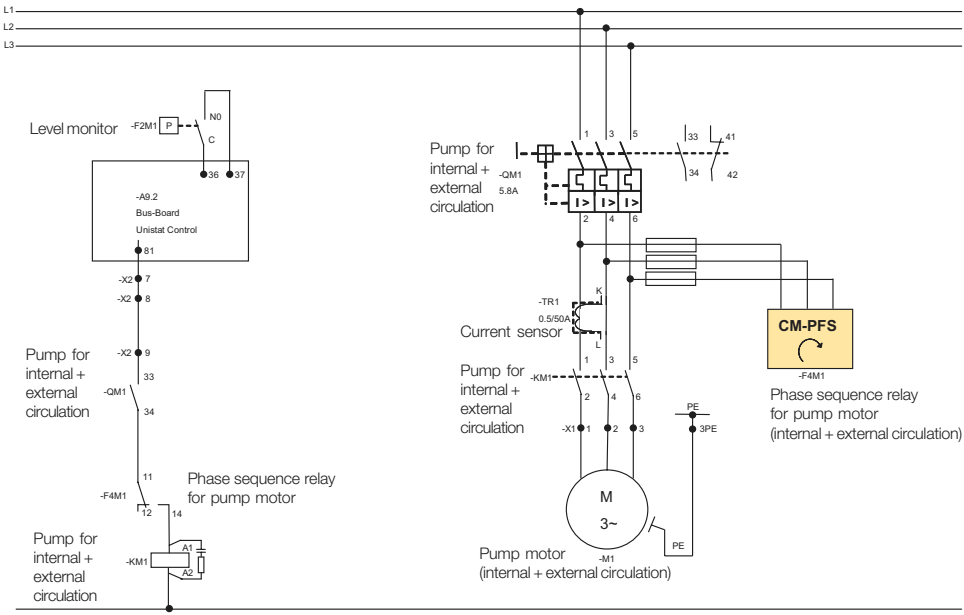

Circuit diagram of a refrigerating machine

Application ‘CNC-controlled sawing system’

Main drive motor monitoring for a timber processing machine

A CNC-controlled sawing system for wood plates of up to 10 m² is monitored by the multifunctional three-phase relay CM-MPS for all phase parameters.

The CM-MPS is used to sensitively detect voltage unbalancing of up to 2 %. Voltage unbalancing has to be avoided since this causes unbalanced currents and thus inadmissible heating of the motor windings.

If the sawing machine is connected to unstable supply systems as they are found e.g. in Asia, a short-term phase loss can lead to a reduction of the motor speed. In case of a sudden voltage return, the saw-blade flanged on the motor axle can release its locking due to its mass inertia. This is a dangerous situation. The rotating saw-blade could come off the axle and be thrown off.

To avoid this, the CM-MPS is used to monitor the power supply system for undervoltage (20 % of nominal voltage) and to switch off the machine if the voltage falls below the threshold. For this purpose a time delay is adjusted on the CM-MPS which prevents the motor from being switched on again for at least 10 s.

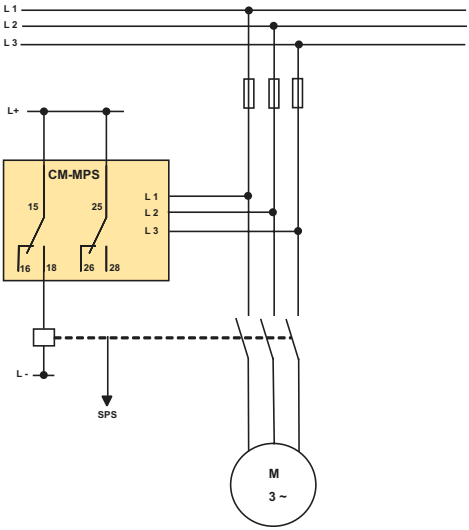

Circuit diagram of a CNC-controlled sawing system

Three-phase monitoring: Frequently asked questions

Q:
Is it possible to supply the three-phase monitoring devices directly from the measuring voltage?
A:
Yes.

Q:
Do I have to connect the three-phase monitor in front of or after the motor contactor?
A:
The three-phase monitor should be connected in front of the motor contactor. This way it is able to detect the phase sequence already before the motor is switched on.

Q:
Has the measuring circuit to be protected by a fuse?
A:
Device protection is not necessary. Sufficient line protection, however, is necessary.

Insulation monitoring

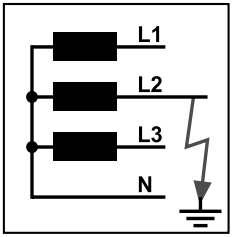

In IT systems which are supplied by an isolating transformer or an independent voltage source, permanent insulation monitoring is of particular importance. Since no active line is directly connected to earth, only very low currents are flowing in case of a fault. In case of an occurring second fault, however, it is no longer possible to ensure the protection of the devices and the availability of the installation. Monitoring of the insulation resistance in IT systems is performed by insulation monitoring devices.

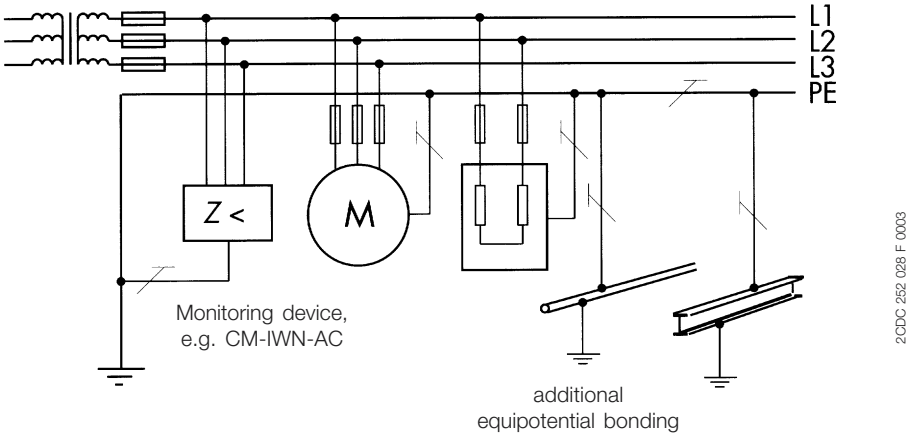

Typical arrangement of an IT system

Insulation monitoring

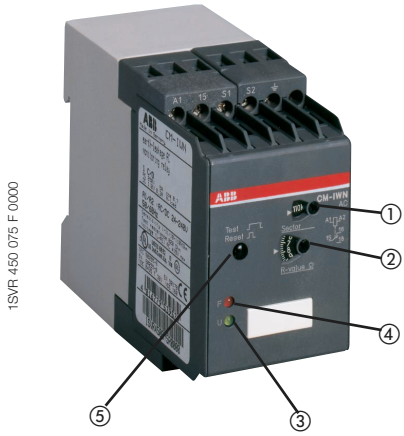

CM-IWN- AC

Insulation monitor CM-IWN-AC

Insulation monitors of the type CM-IWN-AC are able to detect occurring first isolation faults within ungrounded AC systems. Its measuring principle is based on a monitoring of the resistance against earth potential. First, DC voltage is superimposed on the system. Now, an earth-leakage fault can be simulated by pressing the „Test“ button. In case of an existing isolation fault within the system, the device detects the change of the resistance against earth. If the earth-leakage current exceeds the adjusted threshold, the relay is energized with delay. In this case an LED indicates the fault. Fault tripping can also be stored.

① Range selector switch
② Response threshold 1-110 kΩ,
③ Green LED - supply voltage
④ Red LED - relay status
⑤ Test button „Test“ - Reset

Application and connection examples: CM-IWN-AC in IT system and in IT-N system

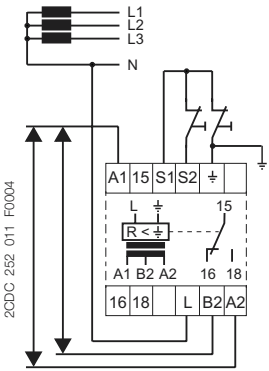

Three-phase IT-N system

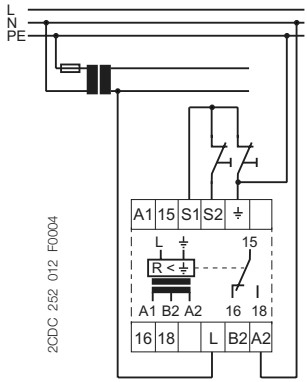

Single-phase IT-N system

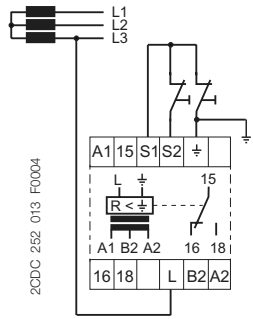

Three-phase IT system

Insulation monitoring

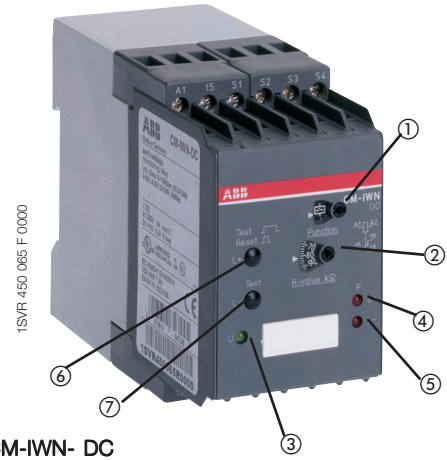

CM-IWN- DC

① Selector switch
open- or closed-circuit principle
② Response threshold 1-110 kΩ
③ Green LED - supply voltage
④ L+: red LED - fault
⑤ L-: red LED - fault
⑥ Test button „Test“ - Reset
⑦ Test button „Test“ L-

Insulation monitor CM-IWN-DC

This device is able to monitor DC systems for isolation faults. Earth-leakage monitoring is performed separately for L+ and L- by means of separate evaluation of the insulation resistance. The threshold, the insulation resistance must not fall below, has to be adjusted manually. An occurring fault is indicated by an LED. Fault tripping can also be stored.

Application ‘emergency lighting’

Insulation monitoring in case of galvanic isolation within emergency lighting systems

In safety lighting systems, for example used for staircase lighting, a minimum safety illumination has to be guaranteed even in case of supply voltage failure. This can be achieved as follows:
The housing of the emergency light contains two lighting fittings. One of them is directly supplied by the mains voltage and in use if the supply voltage is ok.
The second lighting fitting is used to implement the safety function. This one can be supplied by two sources.
The three-phase mains voltage is tapped and fed to this lighting fitting via an isolation transformer. Since in this case the lighting supply voltage is galvanically isolated from mains, insulation monitoring is required to guarantee the availability of the emergency lighting by means of fast fault detection. This task is performed by the CM-IWN-AC insulation monitor.
If the mains voltage fails, none of the two lighting fittings can be supplied from mains. Here, voltage monitoring is required to indicate the voltage failure. In this case, the supply voltage for the second (emergency) lighting fitting is switched to battery supply. But even in case of such a DC supply, isolation faults against earth have to be detected and removed quickly. This task is performed by the CM-IWN-DC insulation monitor.

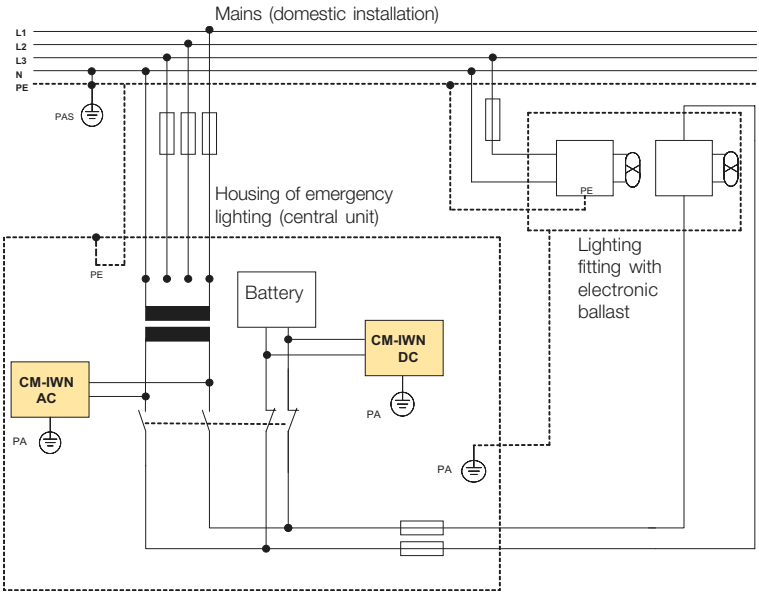

Circuit diagram ‘emergency lighting’

Insulation monitoring: Frequently asked questions

Q:
In which kind of systems can I use the devices CM-IWN-AC and CM-IWN-DC?
A:
They can be used in all systems requiring permanent insulation monitoring, that means in all systems which are galvanically isolated from mains and supplied by an isolating transformer, a generator or a battery (CM-IWN-DC).

Q:
Is it possible to use the CM-IWN-AC for monitoring three-phase systems?
A:
Yes, since all three phases have the same galvanic (DC) potential.

Q:
How many insulation monitoring devices are required in a system that is supplied by several supplies?
A:
For each galvanically isolated system one insulation monitor is required.

Motor load monitoring

The measured motor load can be used as an indicator for the interaction between the motor and the machine driven by the motor. If the motor is running with underload, the actual active power is not equal to the apparent power since the unused current component is converted to magnetic energy, the reactive power. Consequently, investigating the ratio of active power to apparent power is a suitable method that directly provides information concerning the actual motor load.

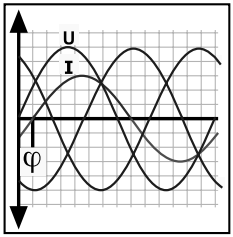

The measuring principle of motor load monitors is based on the evaluation of the phase angle φ between the current and the voltage of a phase. Investigating this characteristic quantity allows conclusion to the motor's actual load condition. Consequently, this precise measuring method can be used to determine the ratio between the active and the apparent power in order to guarantee proper operation of the motor within a specific load range.

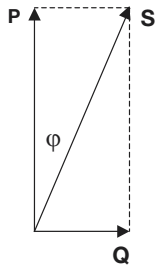

Power chart

S Apparent power
P Active power
Q Reactive power

The total output power S is composed of the actual output power P and the reactive power component Q.

cos φ is a sign for the ratio between the active and the reactive power and thus indicates the real motor load.

Motor load monitoring

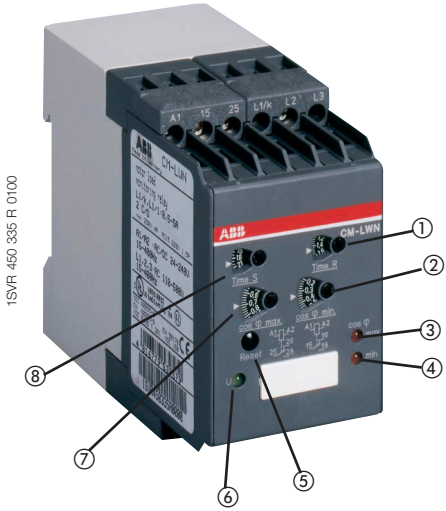

CM-LWN

① Response delay „Time R“
② Threshold for underload limit „cos φ min“
③ Red LED - cos φ max exceeded
④ Red LED - below cos φ min
⑤ Reset button
⑥ Green LED - supply voltage
② Threshold for overload limit „cos φ max“
⑧ Suppression time delay „Time S“

Motor load monitor CM-LWN

The CM-LWN is able to monitor the load condition of inductive loads. This is achieved by determining the value cos φ. A value towards 0 indicates low load. A cos φ value towards 1 indicates high load.
The permitted range of cos φ (i.e. the permitted motor load) is manually adjusted by means of thresholds.
If the load is above or below the permitted range, the corresponding relay is de-energized and the fault signal is indicated by an LED. The relay is energized again if cos φ comes back within the acceptable limits, taking into account the release hysteresis. In this case the LED flashes permanently and can be switched off by pressing the reset button.
The CM-LWN allows the adjustment of two further values: The suppression time can be used to suppress fault signaling during motor starting and the response delay time can be used to suppress fault signaling due to unavoidable short-time load changes during normal operation.

Application ‘conveyor belt’

Control of a baggage conveyor belt at an airport using the motor load monitor CM-LWN

Baggage conveyor belts at airports are used to transport the baggage of passengers. They start as soon as cases are lying on the belt and are stopped automatically as soon as no baggage to be transported is left.

Conveyor belt at an airport

The conveyor belt’s control has to be able to detect the present load condition of the driving motor.
This task is performed by the motor load monitor CM-LWN:
The motor is under load condition if cases are lying on the conveyor belt. The CM-LWN evaluates the phase angle φ the cosine of which is an indicator for the load condition of the motor. The conveyor belt continues running if the cos φ value is within the optimum load limits of the motor. As soon as no cases are left on the belt, the driving motor comes to underload condition.
When observing the power balance, high energy losses are recognized. The motor load monitor detects this unfavorable load condition by means of the adjusted cos φ threshold. The output relay drives the main contactor accordingly and thus causes the motor to be switched off.
The conveyor belt restarts as soon as it is loaded again.

Application ‘car wash’

Adjustment of the cleaning brushes by means of the motor load monitor CM-LWN

Today’s car-washes guarantee thorough and gentle cleaning for all types of cars.

Car wash

In such plants, the rotating cleaning brushes have to be adjusted automatically according to the height and width of the cars in order to provide the desired cleaning effect.
Therefore, a mechanism is required which is able to detect the type of vehicle to be cleaned (big car or very small car). Optical, inductive or capacitive sensors are not suitable for such an application since water and foam would influence their proper operation.
Due to this, contactless adjustment of the cleaning brushes to the car’s outline is performed by the motor load monitor CM-LWN. The load to the brushes drive is given by the car itself. If the cleaning brushes reach the car’s outline, the CM-LWN signalizes that the desired load (the adjusted cos φ) is reached. The cleaning brushes remain in this optimum position for the specific type of car and cleaning can start.

Motor load monitoring: Frequently asked questions

Q:
What is the maximum current-carrying capacity of the CM-LWN measuring inputs?
A:

Current range	Version 0.5-5 A	Version 2-20 A
Perm. overload, current input	25 A for 3 s	100 A for 3 s

Q:
When are the CM-LWN output relays energized?
A:
The output relays are energized after the supply voltage is applied and the measuring current is flowing. The device triggers on the measuring current.

Q:
How can I determine the set value for cos φ min and cos φ max?
A:
Set cos φ min to 0 and cos φ max to 1.
Then switch on the motor and establish nominal operation. Now, turn the adjustment wheel for cos φ min until the output relay changes its state. Repeat this procedure by varying the value for cos φ max.

Q:
What is the release hysteresis?
A:
The release hysteresis is 4°, added to the phase angle φ.
Example: The device changes its state if the maximum load, expressed by cos φ, is reached. It falls back to the original state if cos φ is below cos (φ+4°) again.

Q:
Is it possible to extend the measuring range of the CM-LWN?
A:
Yes. The measuring range of the CM-LWN can be extended by using a current transformer.

Thermistor motor protection

Motors have to be protected reliably against high temperatures. The windings of three-phase motors are coated by an insulating film that can become damaged or even destroyed immediately in case of high temperatures. To guarantee long-term availability of the motor, the windings must never be exposed to critical temperatures. For quick and reliable detection and recovery of faults, an internal measuring method has to be available for temperature acquisition which is able to capture the measuring quantity directly inside the winding.

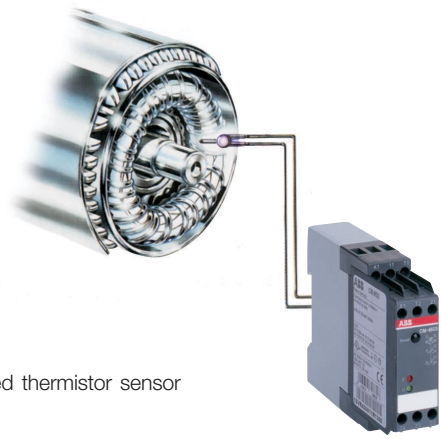

Motor with an integrated thermistor sensor and a CM-MSS

The functional principle of thermistor motor protection relays is based on direct temperature acquisition inside the windings of the motor. For the sensors, PTC resistors are used which behave very high-resistive at high temperatures. They detect any heating of the motor and activate the relay for further processing of the fault signal. The temperature threshold is exclusively determined by the behavior of the used PTC resistors and not adjusted manually.

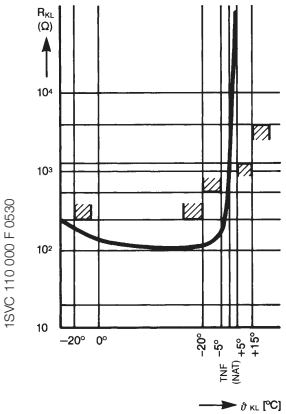

Characteristic of the temperature sensors

Thermistor motor protection

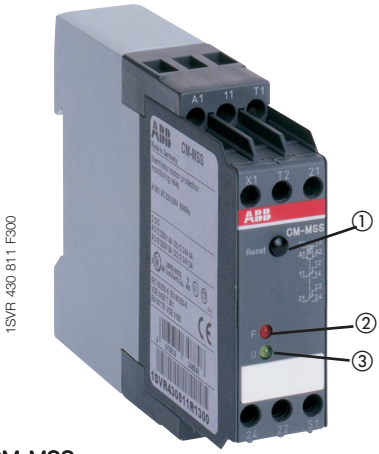

CM-MSS

① Reset
② Red LED - Fault tripping
③ Green LED - Supply voltage

Thermistor motor protection relay CM-MSS

The PTC sensors are incorporated in the windings of the motor and connected to the CM-MSS. If one of these PTC resistors heats higher than permitted, the motor has run too hot. The output relay drops off and this signal can be further processed by a control instance to initiate corresponding fault recovery. As soon as the motor has cooled down, the relay is energized again, if the autoreset function is configured or if the switching command is externally applied via the control inputs (remote reset).

Application ‘carding machine for textile industry’

Thermistor motor protection in textile industry

Carding machines are used in textile industry. Their task is to prepare the fibres, e.g. cotton or chemical fibres, for further processing, such as spinning. The fibres can be delivered either sorted individually or in a mess. Task of the carding machine is to sort and align the fibres in parallel. The result is a continuous fleece, the so-called card sliver. The card sliver is a uniform fibre band with even thickness over the entire card width.

High-performance carding machine

Application ‘carding machine for textile industry’

To guarantee long-term availability of the carding machine, the motor temperature has to be monitored continuously. Too high temperatures would damage the windings of the motor and influence proper operation of the entire machine.
This is why thermistor motor protection is used in carding machines. The PTC sensors are directly incorporated in the windings and connected to the CM-MSS. In case of inadmissible high temperatures, the sensors instantly change their resistance. As a response, the thermistor motor protection relay CM-MSS drives the main contactor accordingly. The motor is immediately switched off in order to avoid irreversible damages of the windings.

After the motor has cooled down the carding machine can be taken into operation again. If the autoreset function is configured, the CM-MSS forwards the signal to the main contactor or the PLC. Switching the motor on again can also be performed using the remote reset function for the output relay.

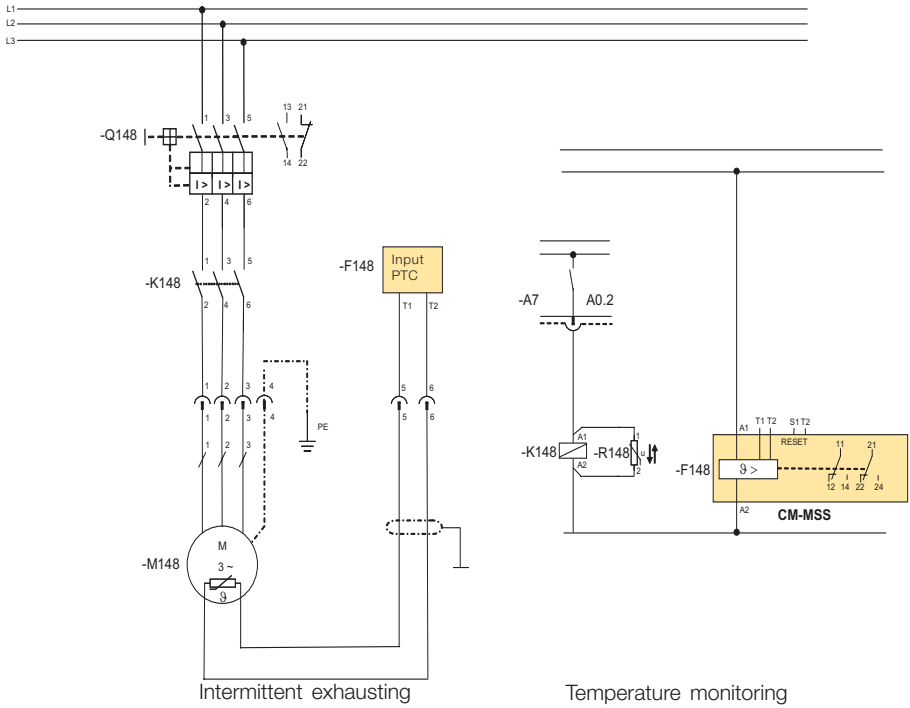

Circuit diagram for thermistor motor protection in textile industry

Thermistor motor protection: Frequently asked questions

Q:
How do I adjust the threshold for the permitted temperature on the CM-MSS?
A:
The permitted motor temperature cannot be adjusted on the device!

The threshold is determined by the selection of the PTC resistor. Please refer to the type plate of your motor for information about the standardized PTC sensor.

Q:
Are the thermistor motor protection relays CM-MSS suitable for use in explosion-endangered areas?
A:
Yes, the thermistor motor protection relays are approved for use in explosion-endangered areas.

The PTB approval has been replaced by Atex 100 on 1. July 2003.

Some thermistor motor protection devices have a configurable short-circuit detection for the sensor circuit integrated. They are approved according to Atex 100 and can thus be used in explosion-endangered areas.

Temperature monitoring

The temperature of solid, liquid and gaseous media can be acquired using special sensors.

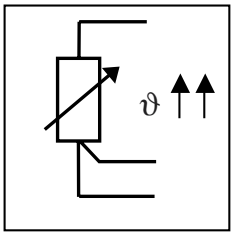

If continuous temperature monitoring is desired, resistive measuring sensors can be used (e.g. PT100). The resistance of such sensors varies depending on the temperature according to their specific characteristic curve. This means that the current resistance of the sensor allows conclusion to the temperature of the monitored medium.
Temperature monitoring relays convert the resistances of the connected measuring sensors to a temperature value and switch the output relays depending on the adjusted temperature thresholds.

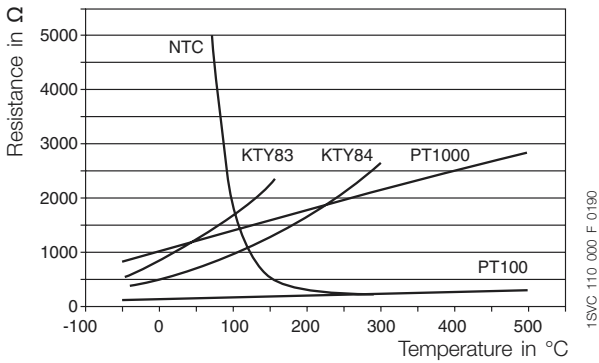

Characteristic curves of resistive sensors

Temperature monitoring

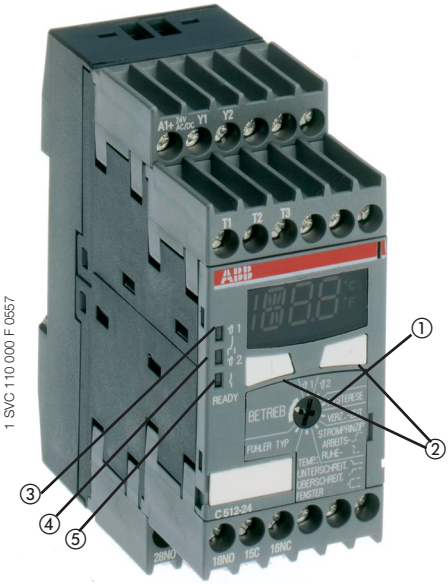

C 512

① Rotary switch for menu navigation
② Adjustment buttons
③ LED threshold ϑ 1
④ LED threshold ϑ 2
⑤ LED supply voltage ON

Temperature monitoring relay C512

The temperature monitoring relay C512 can be used for temperature monitoring of solid, liquid and gaseous media. Temperature acquisition is performed using special resistive sensors with a known temperature-dependent resistive behavior. These sensors are inserted directly into the media to be monitored and connected to the relay C512. The evaluation of the measured quantity and the adjustment of measuring parameters is performed digitally. First, the used sensor type, e.g. PTC sensor PT100, is selected with the device. On the temperature monitoring relay C512 the thresholds for the permissible temperatures can be adjusted as lower or upper threshold or as a range. Depending on the exceeded threshold (value below lower threshold or above upper threshold) output relay K1 or output relay K2 changes its switching state. With this, the status of each sensor is displayed in order to indicate which resistive sensor has exceeded or fallen below the permissible temperature. The wide range of functionality of this device is completed by a fault diagnosis. A particular signaling contact on the relay output enables detection and evaluation of faults like short circuit or sensor wire break.

Application ‘injection molding machine’

Temperature control of the injection material using the temperature monitoring relay C512

Injection molding machine

Injection molding is used for the production of plastic molded articles. The base material are plastic pellets that are melted.

The injection nozzle for injecting the liquid plastic into the mold is heated. Here, permanent temperature monitoring of the material to be molded is of particular importance in order to guarantee that the material is of the correct consistency and does not harden.

For this purpose, a sensor (temperature-dependent resistor PT100) is installed in the mold which continuously delivers the temperature of the plastic to the temperature monitoring relay C512. If an adjusted temperature threshold is exceeded, this device drives a solid-state relay that performs contactless switch-off for the machine’s heating.
Exceeding the adjusted temperature limit furthermore initiates an alarm.

If the temperature of the plastic material falls back below the threshold minus the adjusted hysteresis, the output relay of the C512 drops again and the solid-state relay re-connects the heating to the supply circuit. The injection nozzle is heated again to specifically control the temperature of the plastic.

Application ‘injection molding machine’

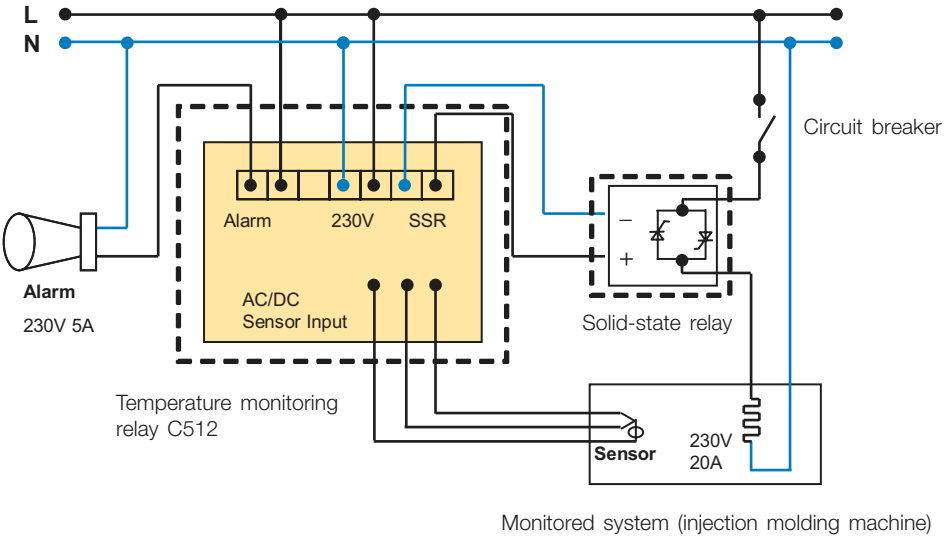

Circuit diagram of an injection molding machine

Temperature monitoring: Frequently asked questions

Q:
The device displays an error message. What are the possible causes?
A:
Fault diagnosis

- ϑ 1,ϑ 2 adjustment outside the permitted temperature range of the selected sensor
- Sensor short circuit
- Sensor wire break
- Hysteresis > 80 K for NTC

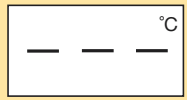

- Measuring value is not in the permitted temperature range of the sensor

Liquid level monitoring

The electric properties of conductive liquids can be used for control purposes. This makes sense if information about the filling level or the mixing ratio of liquids is required, e.g. when filling tanks with a medium or draining filled tanks or when mixing several media. The liquid level information is necessary for the devices or machines working with the media, e.g. pumps, feed regulators, etc. The signal for the current liquid level is forwarded by the control to the driving motor for the corresponding pump or feed regulator.

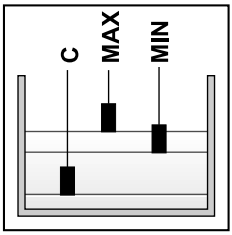

Liquid level relays are able to monitor the liquid levels of conductive liquids. The single-pole electrodes are used as measuring probes. They are immersed into the medium to be monitored and acquire resistive changes if they become wet or dry. This measuring principle is not suitable for DC networks since the electrodes would undesirably act as galvanic cells.

Liquid level monitor CM-ENE-MIN

This device is used to monitor minimum liquid levels. The MIN electrode and a ground reference electrode C are immersed into the conductive liquid. As a result, the output relay is energized. The output relay is de-energized as soon as the level reaches the point where the adjusted resistance is measured, i.e. where the MIN electrode becomes dry.

1SVR 550 851 F 9500

CM-ENE-MIN

① Yellow LED - relay status

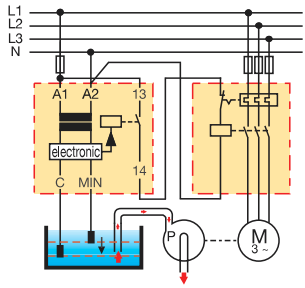

1SVC 110 000 F 0494

Liquid level monitoring

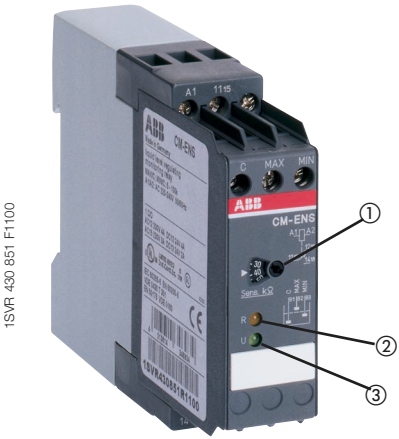

Liquid level monitor CM-ENS

Using this type of liquid level monitor the liquid level can be maintained within a specific range, limited by a maximum level and a minimum level. Using two measuring electrodes (MIN and MAX) and one reference electrode C the resistive change at different liquid levels can be acquired. First, the output relay is de-energized. It energizes if the maximum permitted liquid level is exceeded. It de-energizes again if the level falls below the minimum permitted liquid level.

CM-ENS

① „Sens.“ (sensitivity) Potentiometer for adjusting the response sensitivity
② Yellow LED - relay status
③ Green LED - supply voltage

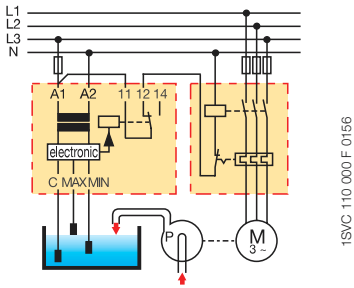

Filling

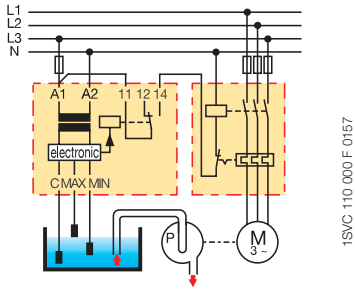

Draining

Application ‘swimming-pool’

CM-ENS used for liquid level control in pump systems

Pumps are used in various fields of application, such as water-management, agriculture and industry. Their work is directly coupled to the level monitoring of liquids.

In swimming-pools the pumps are used to fill and drain the pool. Here, it is important to monitor the water level in the swimming-pool to prevent the pump from running dry if the pool is empty or to stop the pump if the pool is full.

Consequently, a pump control mechanism is required which is able to detect the water level inside the pool and to control the driving motor.

Swimming-pool

This is where the CM-ENS liquid level monitor can be used. The MIN and MAX electrodes as well as the reference electrode C are immersed into the medium to be monitored.
The MIN electrode is placed to the bottom of the pool to signalize the CM-ENS when the water has reached the minimum level. The liquid level monitor then drives the main contactor of the pump motor correspondingly. The motor and the pump driven by the motor are switched off and thus protected against dry-running.

The MAX electrode is placed into the swimming-pool to the height of the maximum desired water level. When the water in the swimming-pool reaches this level, the CM-ENS signalizes this event to the pump control. The pump control stops the pump to prevent the pool from overflowing.

Application ‘liquid starter’

Liquid level monitoring in liquid starters using the liquid level monitor CM-ENE-MIN

Liquid starters are used to start slip-ring motors.
Slip-ring motors are preferred for applications where it is important to reliably achieve high power.

Thus, possible applications for slip-ring motors range from cement mills where starting under full load is a conceivable application, via fans that require long starting times, up to applications in water supply or in iron and steel production.

The starting process for slip-ring motors by means of a liquid starter can be described as follows in a simplified manner:
The electrolyte tank of the liquid starter is filled with a soda solution. An integrated motor is used to move two electrodes towards each other. In order to reach continuous current flow between the electrodes, they permanently have to be washed by the soda solution. The continuous increase of current causes the connected slip-ring motor to start as soon as the required torque has been reached.
Therefore, starting of the motor depends on the liquid level of the soda solution. A minimum level of the electrolytic solution has to be kept in order to have permanent washing of the electrodes. This is where the CM-ENE-MIN liquid level monitor can be used. The output relay de-energizes if the minimum level is reached. This signal is forwarded to the AC010 logic module and the connected motor is prohibited from starting.

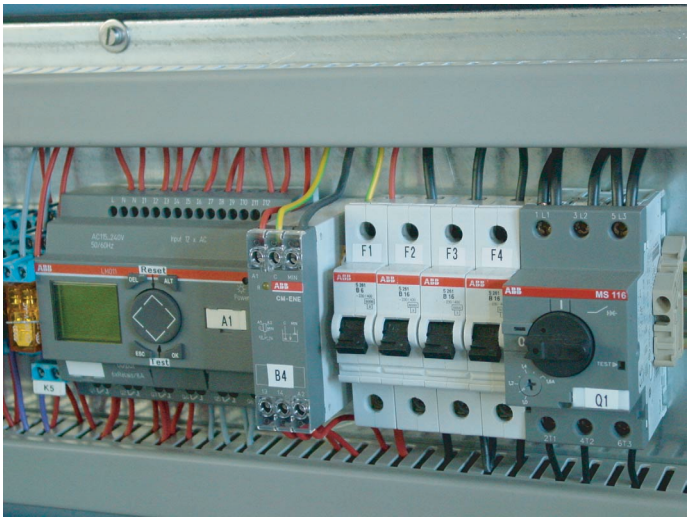

Control cabinet of a liquid starter

Application ‘liquid starter’

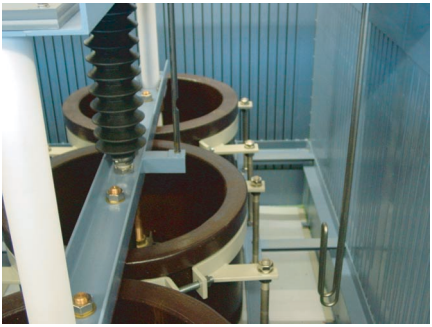

Interior view of a liquid starter

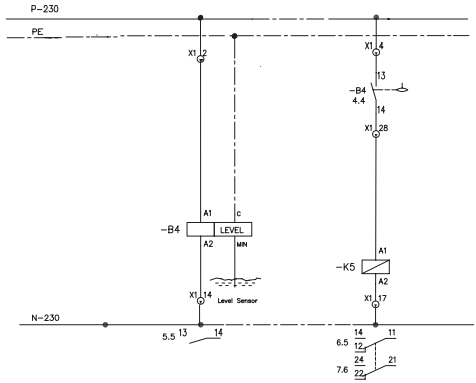

Cut-out of a circuit diagram for a liquid starter (1)

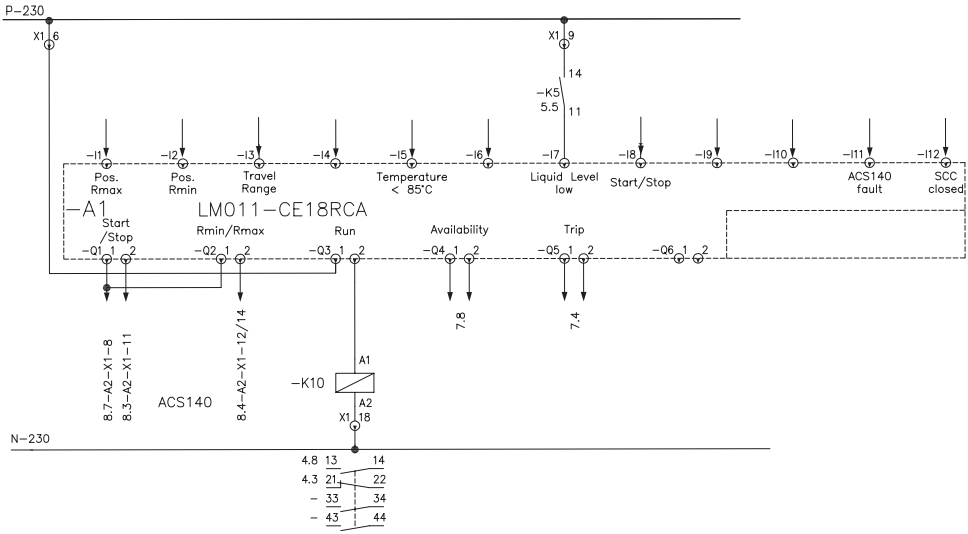

Cut-out of a circuit diagram for a liquid starter (2)

Liquid level monitoring: Frequently asked questions

Q:
Which media are suitable for liquid level monitoring using the CM-ENE-MIN, CM-ENS?
A:
All electrically conductive media. Please refer to the catalogue for a detailed list of suitable media.

Q:
How do I select the suitable device for the used media?
A:
The device has to be selected according to your operational requirements. If you know the electric conductance of the medium to be monitored, select a device with a suitable response sensitivity. (The response sensitivity that can be adjusted on the device in kΩ is the reciprocal of the electric conductivity.)

If you do not have any information about the conductivity of the medium to be monitored you have to determine the response sensitivity to be adjusted prior to device commissioning (CM-ENS):

Determination of response sensitivity
Adjust the response sensitivity on the device (Sens. kΩ) to the minimum value. After all electrodes are washed by the liquid to be monitored, turn the sensitivity potentiometer towards the maximum value until the output relay is energized. You should also check that the relay is de-energized again if the electrode becomes dry.

Q:
No response or only late response of the relay when the electrode becomes wet or dry. What are the possible causes?
A:
Possibly the conductivity of the medium has changed, e.g. due to contamination of the electrodes.
You can try to clean the electrodes or readjust the response sensitivity of the device according to the conductivity of the medium. For the readjustment of thresholds proceed as for the initial adjustment of the response sensitivity (refer to the above instructions for „determination of response sensitivity“).

Contact protection

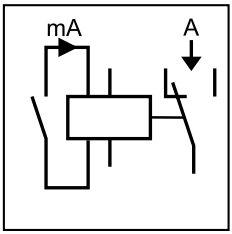

Some sensitive kinds of contacts, such as reed contacts or float switches, are not able to switch high contact loads. To extend their lifetime, special contact protection measures have to be used to take load from the sensitive contacts and thus reliably oppose their destruction.

In some applications the close time of the electric contact is such short that its pulse length is not sufficient to drive a contactor. In such cases, switching amplification or extension has to be implemented.

These two tasks can be performed by the contact protection relay CM-KRN.

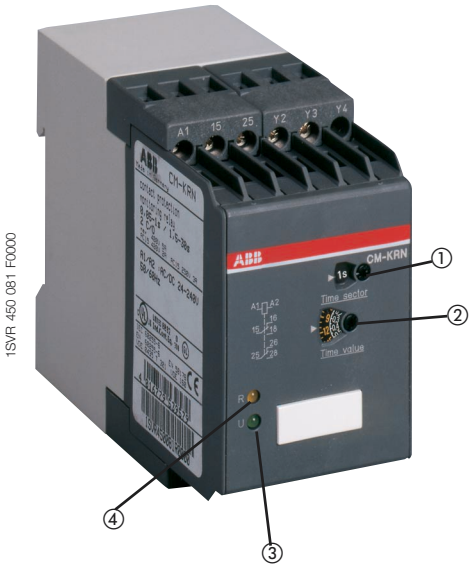

CM-KRN

① Time range selector switch
② Response delay adjustment
③ Green LED - supply voltage
④ Yellow LED - relay status

Contact protection relay CM-KRN

The contact protection relay is used to protect sensitive contacts and to remove load from these contacts as well as for switching amplification purposes.
The output relay is energized if the contact to be protected is closed for at least 20 ms.
The switch position can be stored.
Furthermore, a response delay can be adjusted to bridge contact bouncing. The relay can be operated via 3-wire proximity sensors for switching of higher power.

Application ‘wire drawing machine’

Wire break detection using the contact protection relay CM-KRN

Wires are used in many areas, e.g. for car tyres, current transmission, nail production, etc.

Base materials for the wire processing industry are drawn wires with specific diameters and surface structures.

The principle of wire drawing can be described as follows: The wire has to be treated until it has the diameter and surface structure suitable for the desired application. This is done in several drawing steps. In each step the wire is drawn through a drawing tool (drawing stone) with the input hole wider than the output hole. This way the diameter is reduced. Special surface treatment is used to increase the sleekness of the wire and thus the quality. After this, the wire is winded on a driven drum.

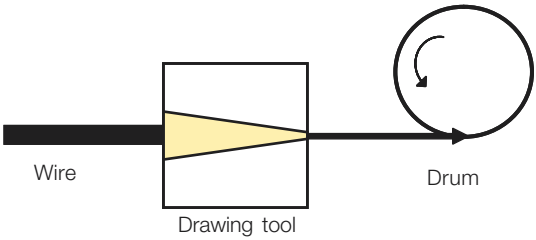

Principle of drawing

Drawing is repeated in several steps with different drawing tools until the desired diameter is reached.

Wire drawing machine

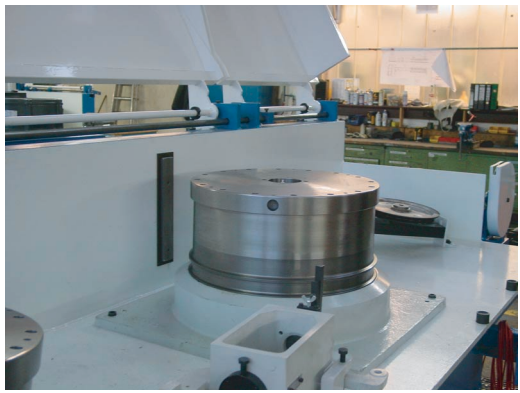

Drawing drum with contact strip

Application ‘wire drawing machine’

In case of an occurring wire break during the process of drawing, the end drum used to wind up the wire after the last drawing step is not filled completely.

In order to oppose such inefficient production, reliable detection of wire breaks is necessary. For this purpose, each drum has a metal contact strip attached which is bumped by the broken wire. This short electric pulse is acquired by the contact protection relay CM-KRN and extended. The information at which drawing tool the wire break occurred is forwarded to a PLC which causes the machine to be stopped. Finally, the broken wire has to be repaired by welding it together manually. Then wire drawing can be continued.

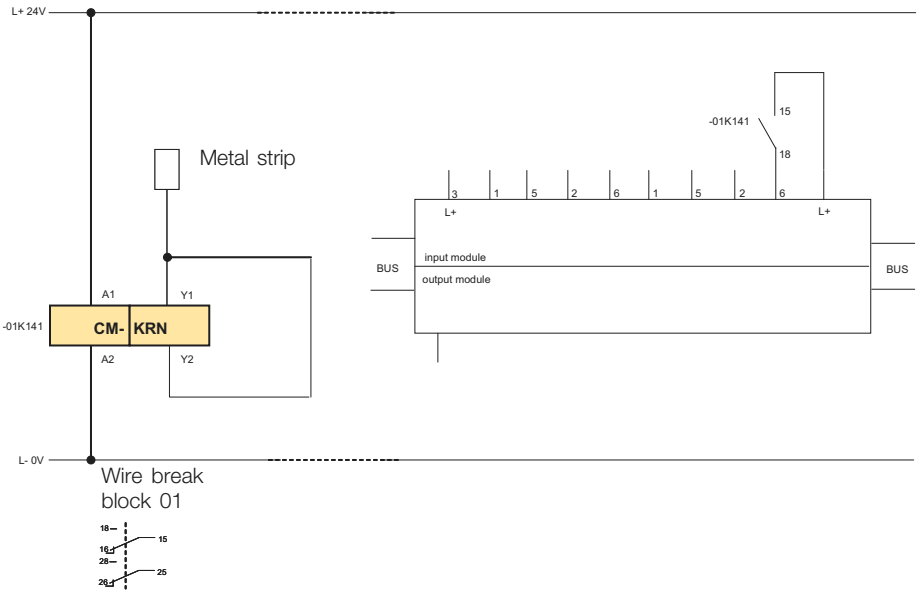

Cut-out of a circuit diagram for a wire drawing machine

Application ‘tunnel driving machine’

Safety for the operator control panel of the cutting head of a tunnel driving machine

Tunnel driving machines cut themselves through different geological materials, remove the excavated material and make the tunnel safe.
The main component of a tunnel driving machine is the cutting head equipped with special cutting tools. The material excavated by the cutting tools is removed by means of conveyor belts.
While driving the tunnel forwards it is at the same time lined by shotcrete or by blocks made of reinforced concrete.
The machine is controlled by an operator from a control cabin or an operator control panel.
The machine is steered exactly along the planned tunnel axis and deviations are immediately corrected by the operator.

Tunnel driving machine (for hard stones)

Application ‘tunnel driving machine’

©Herrenknecht AG

Operator with control panel

The control can be switched on and off by the operator using a detachable key switch. Due to safety reasons the control panel must not be supplied with 230 V voltage. For this reason the contact protection relay CM-KRN is connected in series before the main switch. This makes only a voltage of 24 V available on the control panel and thus guarantees safety for the work with the operator control panel.

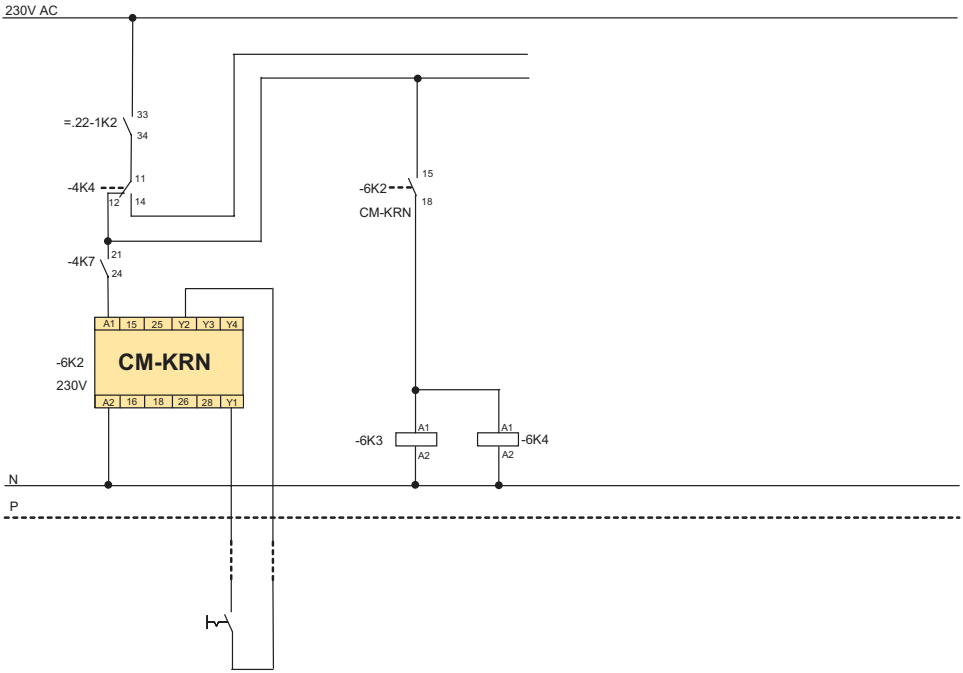

Cut-out of a circuit diagram for a tunnel driving machine

Contact protection: Frequently asked questions

Q:
What are the currents and voltages at the control inputs of the CM-KRN?

A:

No-load voltage (Y1, Y2) (Y1, Y3, Y4)	≤10 V DC
Switching current	≤ 3 mA

Sensor interface

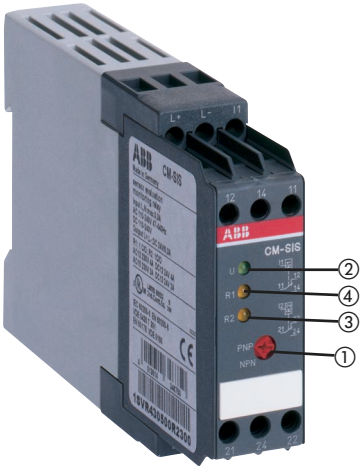

Sensor interface module CM-SIS

The CM-SIS is used to supply 2- or 3-wire NPN and PNP sensors with power and to evaluate their switching signals. Up to two sensors can be connected simultaneously and supplied with 24 V DC. The relay is energized depending on the input current of the PNP or NPN transition. If the switch-on current threshold is exceeded, the corresponding LED lights up and the relay of the sensor circuit is energized.

CM-SIS

① Rotary switch, sensor type selection
② Green LED - supply voltage
③ Red LED - relay status R1
④ Red LED - relay status R2

Connection of 2-wire sensors

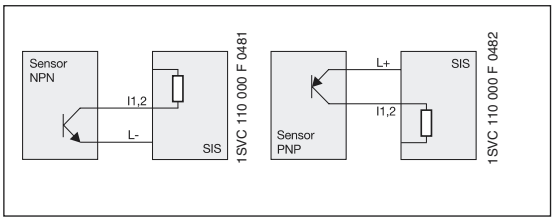

Connection of 3-wire sensors

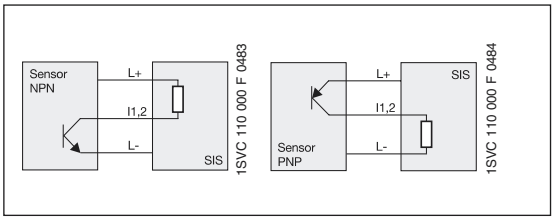

Application ‘roller gate drive’

Drive control with sensors

Roller gates are for example used as garage doors. They consist of several single lamellae, are flexible and space-saving and thus prevent possible damages of the car when opening and closing.

Garage roller gate

Roller gates are guided on both sides by rails. During opening, the lower part of the gate raises and the upper part of the gate horizontally slides back directly under the ceiling. It is lowered again to close the gate.

Control for the roller gate drive can be performed via a wireless remote control or via push-button switches. If the open command is issued, the main contactor is energized and the signal is forwarded to a self-locking contact. The driving motor starts.
Two sensors are used to determine the gate’s positions in order to stop the motor automatically if the gate is completely opened or closed.

One sensor is mounted on the back end of the guiding rails to detect when the gate is completely opened. The second sensor is installed on the front side near the ground. This sensor signalizes that the roller gates has reached the ground and is closed.

To enable proper processing of the sensor information, the sensor interface module CM-SIS is used here.

Application ‘roller gate drive’

In this case the CM-SIS has two tasks: The one task is to provide the voltage supply for both sensors and the second is to acquire and process the sensor signals regarding the roller gate’s position.

If the CM-SIS receives the information that the gate is completely opened from the sensor mounted on the back end of the guiding rail, it drives the main contactor to stop the motor. When closing the roller gate, the motor (now running in the opposite direction) is stopped accordingly as soon as the sensor mounted near the ground issues the „closed“ signal to the CM-SIS.

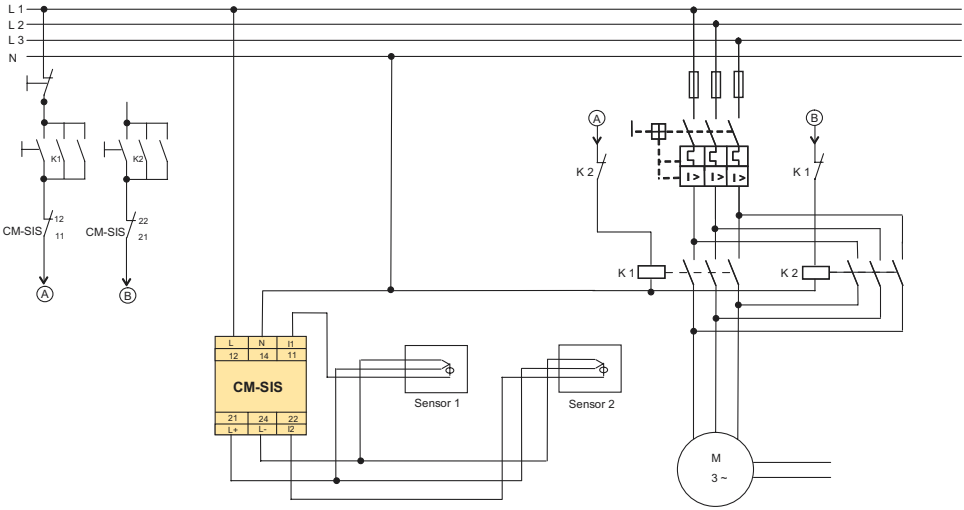

Circuit diagram of a roller gate drive

Sensor interface: Frequently asked questions

Q:
Is the CM-SIS able to evaluate NPN and PNP sensors?
A:
Yes. Connection diagrams for both sensor types can be found on page 54.

Index

Symbols

A

B

C

D

E

F

G

H

I

L

M

N

O

P

R

S

T

U

V

W

Publication No. 2CDC 112 004 M0201 - Printed in the Federal Republic of Germany

ABB STOTZ-KONTAKT GmbH

ABB STOTZ-KONTAKT GmbH
Eppelheimer Straße 82
69123 Heidelberg
Germany

www.abb.de/epr